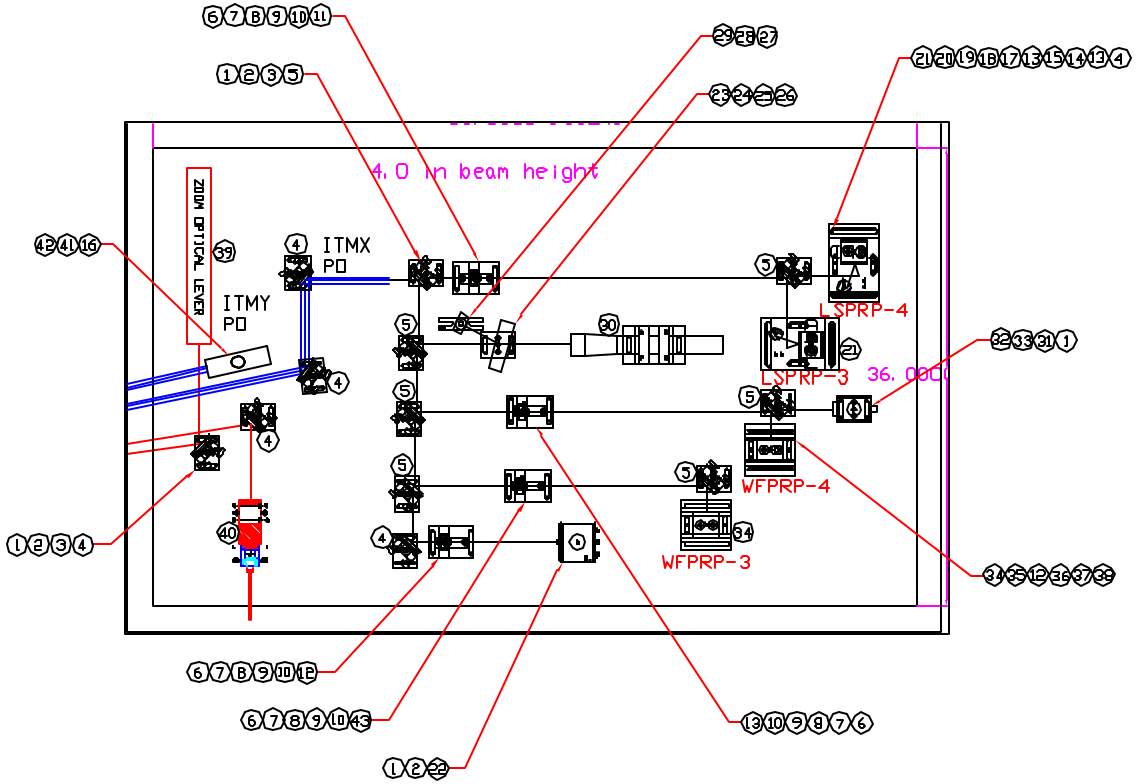

		UNLESS OTHERWISE SPECIFIED DIMENSIONS ARE IN FEET (mm) TOLERANCES FRACTIONAL ± ANGULAR ± ANGULARITY ± ZERO ± TWO PLACE DECIMAL ± THREE PLACE DECIMAL ± FORCING SURFACE RMS BREAK CORNERS OR REMOVE ALL BURRS											LIGO CALIFORNIA INSTITUTE OF TECHNOLOGY MASSACHUSETTS INSTITUTE OF TECHNOLOGY
													40 METER INTERFEROMETER ISC TABLE (TN PICK OFF
XXX	XXX	MATERIAL:	HEAT TREAT:	FINISH:	00	PRE-RELEASE	-	-	-	-	A. SMITH	5/23/01	CAD FILE D010097-00.dwg / SIZE C / DWG NO. D010097-00
DWG. NO.	DESCRIPTION				REV	DESCRIPTION	DCN NUMBER	-	APPR'D	CHECK	DRVN	DATE	
REFERENCE DRAWINGS		USED ON XXX	NEXT ASS'Y: XXX		ISSUE DESCRIPTION								SCALE NTS / SHEET 1 OF 1