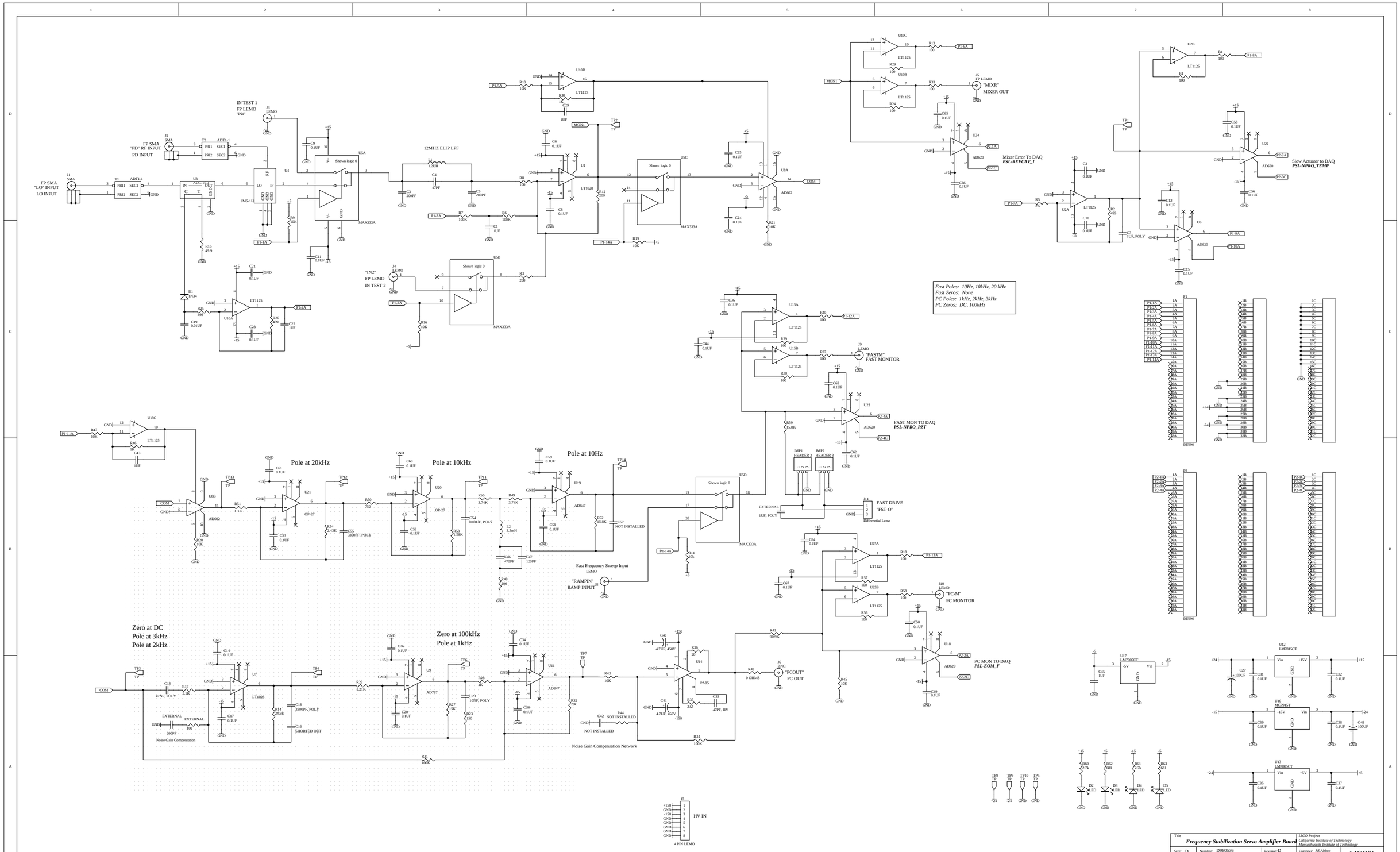
FP SMA
"LO" INPUT
LO INPUT
FP SMA
"PD" RF INPUT
PD INPUT
IN TEST 1
FP LEMO
"IN1"
12MHZ ELIP LPF
"IN2"
FP LEMO
IN TEST 2
Mixer Error To DAQ
PSL-REFCAV_I
"MIXR"
MIXER OUT
Slow Actuator to DAQ
PSL-NPRO_TEMP
Fast Poles: 10Hz, 10kHz, 20 kHz
Fast Zeros: None
PC Poles: 1kHz, 2kHz, 3kHz
PC Zeros: DC, 100kHz
"FASTM"
FAST MONITOR
FAST MON TO DAQ
PSL-NPRO_PZT
FAST DRIVE
"FST-O"
Differential Lemo
"PC-M"
PC MONITOR
PC MON TO DAQ
PSL-EOM_F
"PCOUT"
PC OUT
Pole at 20kHz
Pole at 10kHz
Pole at 10Hz
Fast Frequency Sweep Input
LEMO
"RAMPIN"
RAMP INPUT
Zero at DC
Pole at 3kHz
Pole at 2kHz
Zero at 100kHz
Pole at 1kHz
Noise Gain Compensation
Noise Gain Compensation Network
HV IN
4 PIN LEMO
Title
Frequency Stabilization Servo Amplifier Board
Size: D
Number: D980536
Revision: D
LIGO Project
California Institute of Technology
Massachusetts Institute of Technology
Engineer: RS Abbott
Sheet 1 of 1
LIGO