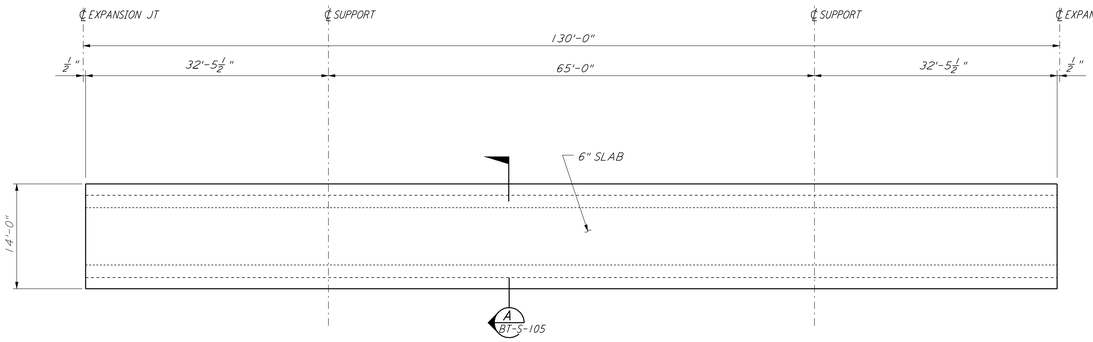

TYPICAL SLAB BETWEEN EXPANSION JOINTS

DETAIL 1 REF
1/8" = 1'-0" BT-S-106 BT-S-104

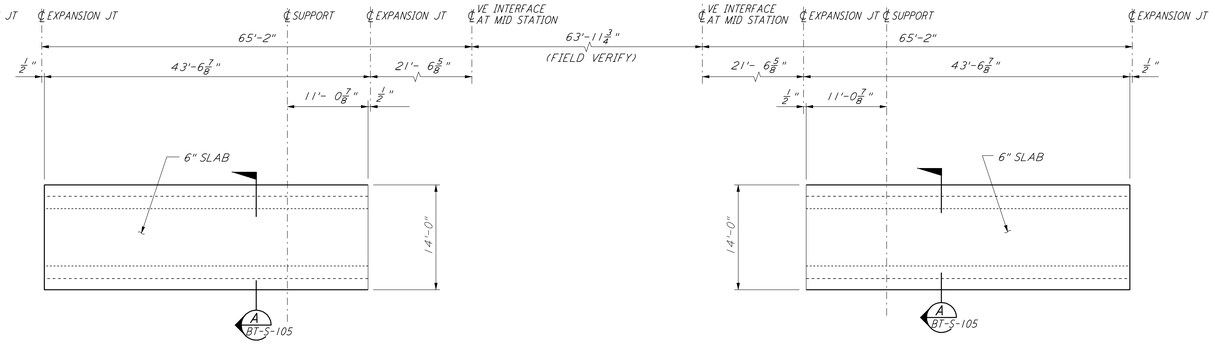

TYPICAL SLAB AT MID STATION

DETAIL 2 REF
1/8" = 1'-0" BT-S-106 BT-S-104
BT-S-105

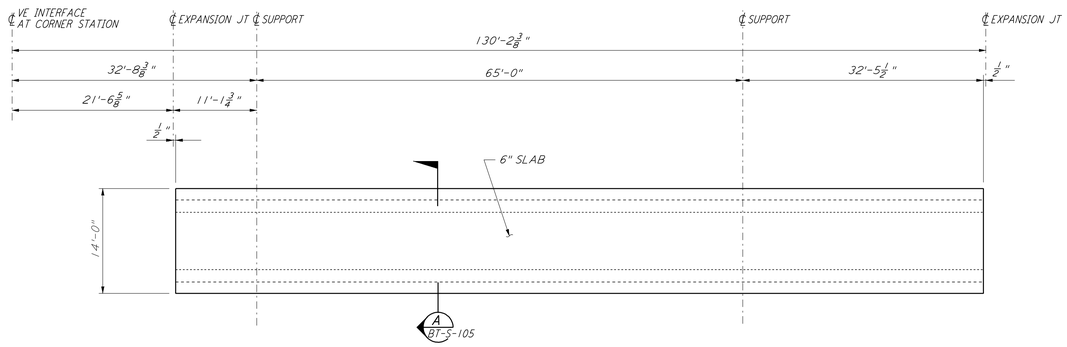

TYPICAL SLAB AT CORNER STATION

DETAIL 3 REF
1/8" = 1'-0" BT-S-106 BT-S-104
BT-S-105

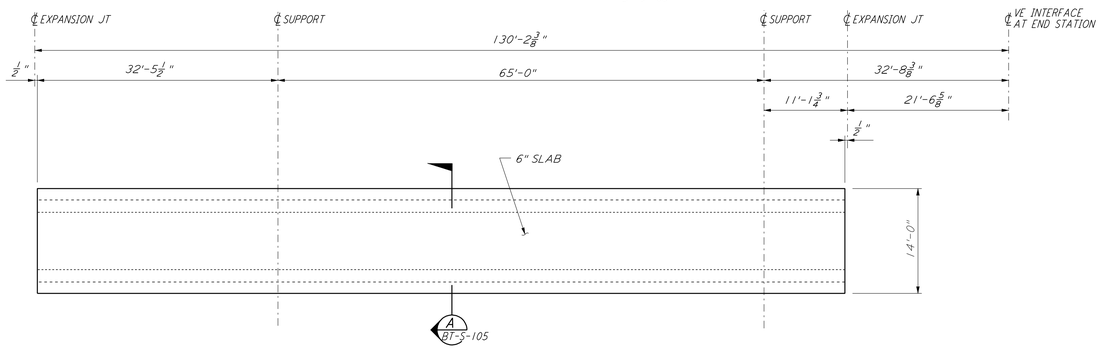

TYPICAL SLAB AT END STATION

DETAIL 4 REF
1/8" = 1'-0" BT-S-106 BT-S-104
BT-S-105

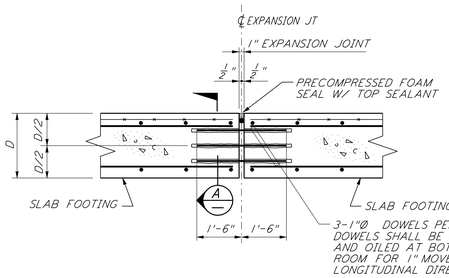

TYPICAL EXPANSION JOINT AT SLAB FOOTING

DETAIL 5 REF
1/2" = 1'-0" BT-S-106 BT-S-104

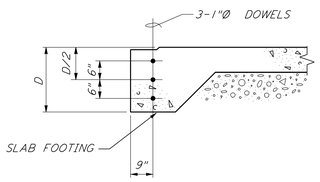

NOTE:
FOR INFORMATION NOT SHOWN SEE SECTION A BT-S-105

SECTION A
1/2" = 1'-0"

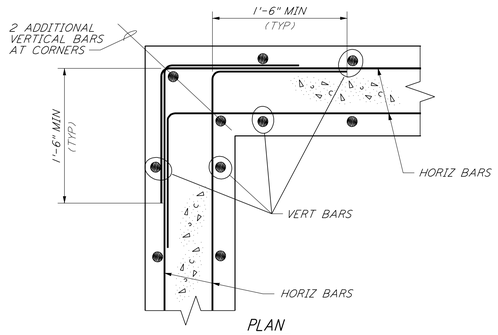

PLAN

DETAIL 6 REF
1 1/2" = 1'-0" BT-S-106 BT-S-105

NOTE:
1. FOR GENERAL NOTES, ABBREVIATIONS AND LEGEND SEE DRAWING BT-S-101.

0 1 2 3FT
1 1/2" = 1'-0"

0 2 4 6 8FT
1/2" = 1'-0"

0 8 16 24 32FT
1/8" = 1'-0"

FOR REFERENCE ONLY

LIGO-D961583-A-O

REFERENCES		REVISIONS						
		A	5-10-96	MCS				ISSUED FOR BID
DRAWING NO.	DESCRIPTION	NO.	DATE	BY	CHKD	ENGR	PROJ	DESCRIPTION

DRAWN	MCS	
CHECKED		
ENGINEER		
PROJ		

PARSONS
100 WEST WALNUT STREET
PASADENA, CALIFORNIA

LIGO
CALIFORNIA INSTITUTE OF TECHNOLOGY
MASSACHUSETTS INSTITUTE OF TECHNOLOGY

LASER INTERFEROMETER
GRAVITATIONAL-WAVE OBSERVATORY
BTE INSTALLATION - HANFORD, WA

TITLE: STRUCTURAL BEAM TUBE ENCLOSURE SECTIONS & DETAILS SHEET 2

SCALE: AS NOTED | CONTRACT NUMBER: PP150969 | PROJECT NUMBER: 8094

SHEET NUMBER: BT-S-106 | REVISIONS: A

LIGOBTIF.BDR

This document and the design it covers are the property of PARSONS. They are loaned only with the borrower's expressed written agreement that they will not be reproduced, copied, loaned, exhibited, or used in any other way, except by written consent from PARSONS to the borrower.

Fri Sep 11 12:53:22 1998 e:\plot\acf\S3-30.acf N:\DUEUES\E30B2\ST106.PRF