| REV | DATE | DRAWN BY | CHECKED | DCC | DCN/DESCRIPTION |
|---|---|---|---|---|---|
| A | 9-8-96 | C. CONLEY | D. COYNE | L. TURNER | E960113/INITIAL RELEASE |
| B | 8-11-97 | C. CONLEY | | | E970126-00-D |

NOTES: (UNLESS OTHERWISE SPECIFIED)

1. ALL DIMENSIONS ARE IN MILLIMETERS AND DEGREES-MINUTES.
2. DRAWING TO BE INTERPRETED PER ANSI Y14.5M-1982.
3. POLISH ALL FACES, EDGES AND CHAMFERS PER SPECIFICATION LIGO-E960092-D.
4. REGISTRATION MARK IS LOCATED COINCIDENT WITH THE REGISTRATION MARK DRAWN ON THE BLANK ±5mm.
5. 91°12'±5'.
6. 2°24'±5'. PART IS SYMMETRICALLY WEDGED.

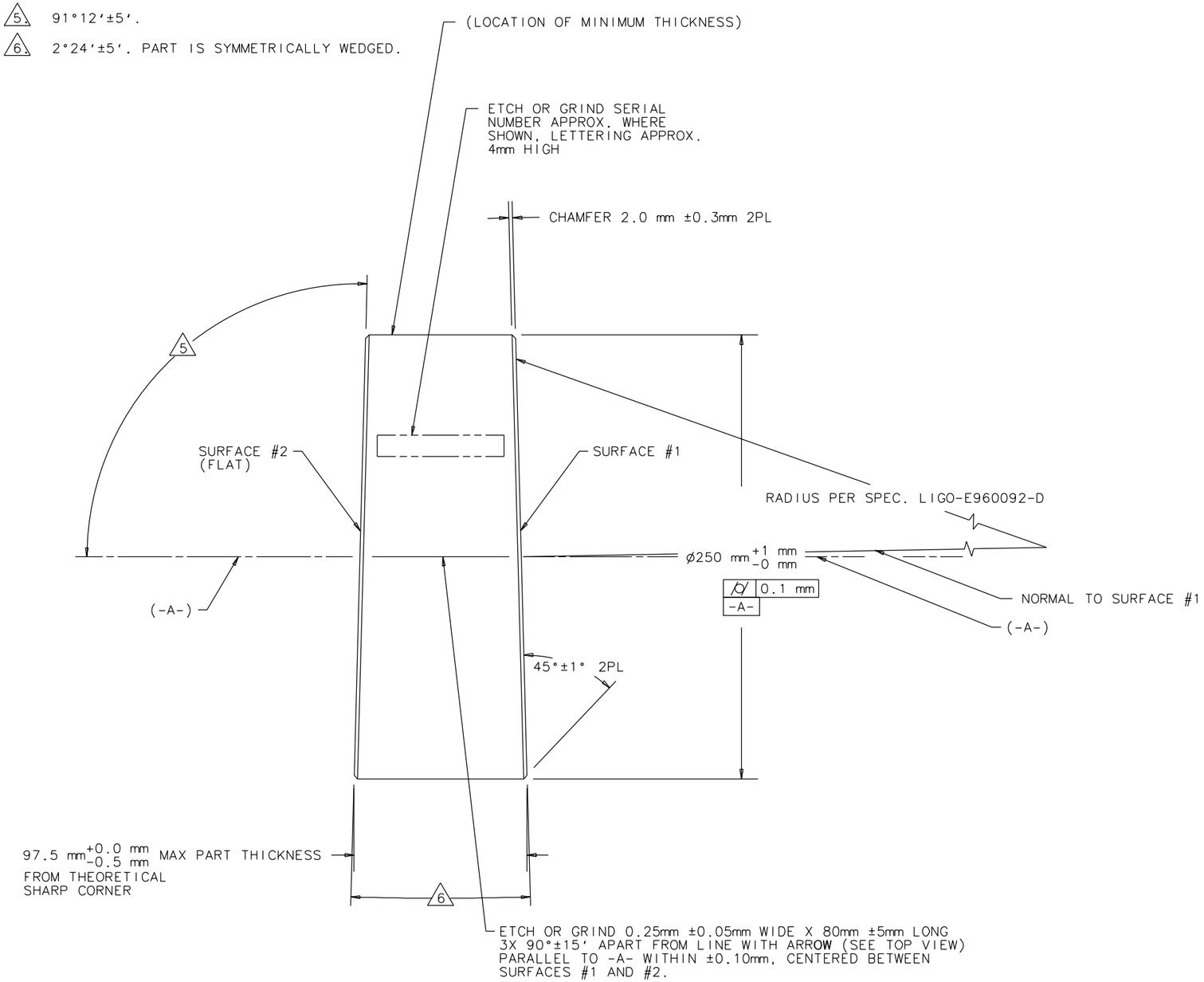


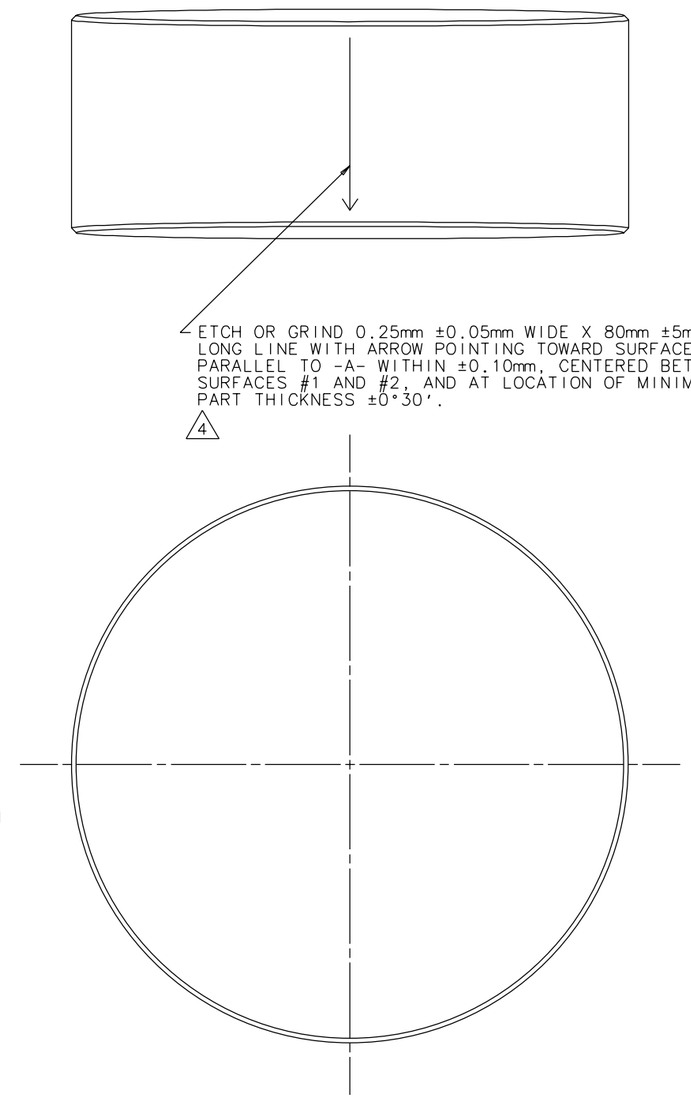


| | | DATE |
|---|---|---|
| DRWN | C CONLEY | 9-8-96 |
| CHKD | | |
| ENGR | | |
| APPD | | |

MATERIAL:
FUSED SILICA PER LIGO-E960096-D

DO NOT SCALE DRAWING

CALIFORNIA INSTITUTE OF TECHNOLOGY
MASSACHUSETTS INSTITUTE OF TECHNOLOGY
LIGO PROJECT

CAD FILE: D960785_B.asc
dcc file: /home/dcc/docs/D960785-B.pdf

RECYCLING MIRROR SUBSTRATE

| SCALE: NTS | SIZE | DRAWING NUMBER | SHEET |
|---|---|---|---|
| | B | D960785-B-D | 1 OF 1 |