DATE: 09/11/98 TIME: 12:57:10
DESIGN FILE: I:\ligo\site1\st\bts602.dgz

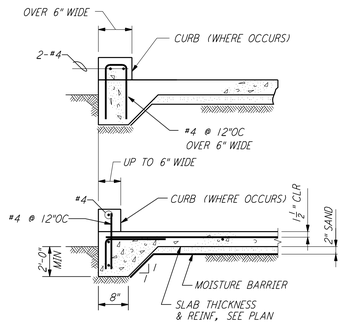

NOTE:
INSTALL MOISTURE BARRIER WITH 2" SAND COVER ONLY WHEN SLAB IS INSIDE BUILDING

SLAB ON GRADE EDGE (1)

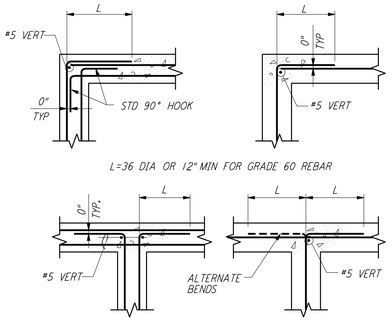

HORIZONTAL WALL REINFORCEMENT (2)

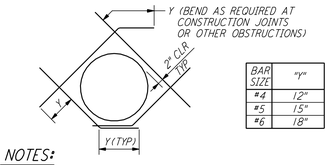

BAR SIZE	"Y"
#4	12"
#5	15"
#6	18"

NOTES:
1. CUT NORMAL REINFORCEMENT AT OPENING.
2. DIAGONAL BARS TO BE PLACED:
   A. AT ℄ OF WALL OR SLAB WHERE ONE LAYER OF REINFORCEMENT IS PROVIDED.
   B. AT EACH FACE OF WALL OR SLAB WHERE TWO LAYERS OF REINFORCEMENT ARE PROVIDED.
3. UNLESS OTHERWISE NOTED, SIZE OF DIAGONAL BARS SHALL BE THE SIZE OF THE LARGEST NORMAL REINFORCING BAR CUT.
4. THIS DETAIL TO BE USED ONLY WHEN CALLED FOR ON THE DRAWINGS OR WHEN NO OTHER DETAIL IS SPECIFIED.
5. THIS DETAIL SHALL APPLY TO OPENINGS 6" IN DIAMETER AND LARGER.

DIAGONAL REINFORCEMENT AT CIRCULAR OPENINGS (3)

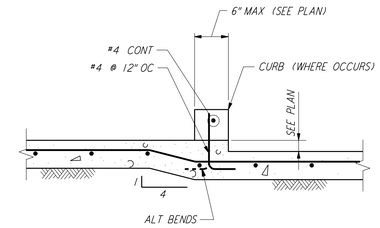

NOTES:
1. SEE ARCH PLAN FOR EXTENT OF CURB.
2. FOR ADDITIONAL INFORMATIONS SEE DETAIL (1)

DEPRESSED SLAB (4)

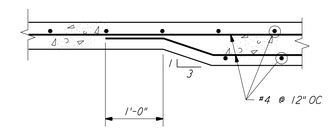

NOTE:
1. FOR ADDITIONAL INFORMATIONS SEE DETAIL (1)

THICKENED SLAB (5)

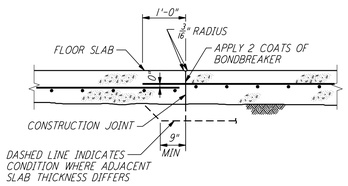

CONSTRUCTION JOINT

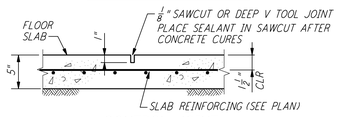

CONTROL JOINT

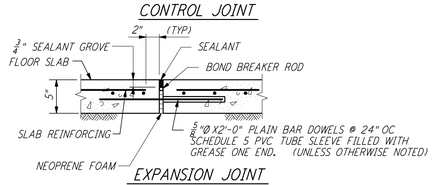

EXPANSION JOINT

NOTE:
CONSTRUCTION JOINT DETAIL IS MANDATORY FOR POUR JOINTS. AT OWNERS OPTION SLAB MAY BE POURED CONTINUOUS & CONTROL JOINTS MAY BE USED EVERYWHERE ELSE. CONSTRUCTION JOINT TO BE USED IN ONE DIRECTION AND CONTROL JOINTS IN THE OTHER DIRECTION - LIMIT OF POUR 400 SQ FT.

SLAB ON GRADE JOINTS (6)

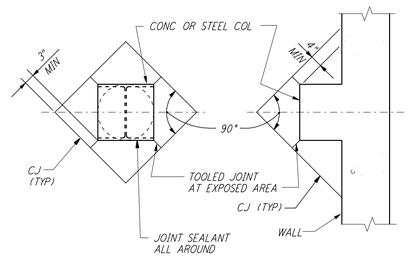

SLAB ON GRADE
CONSTRUCTION JOINTS AT COL (7)

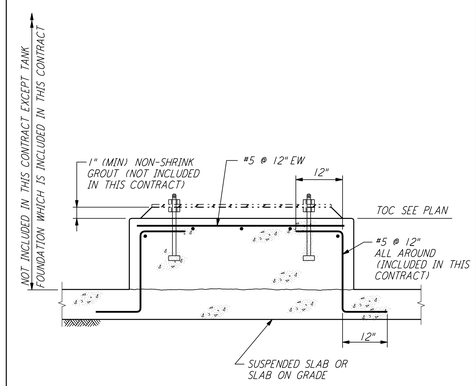

EQUIPMENT BASE (8)

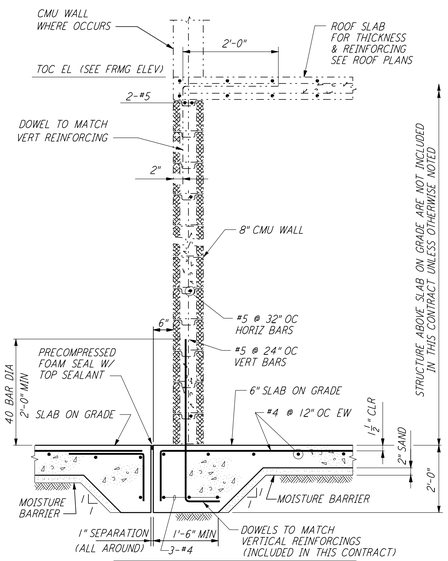

NOTE:
INSTALL MOISTURE BARRIER WITH 2" SAND COVER ONLY WHEN SLAB IS INSIDE BUILDING

MASONRY WALL DETAIL (10)

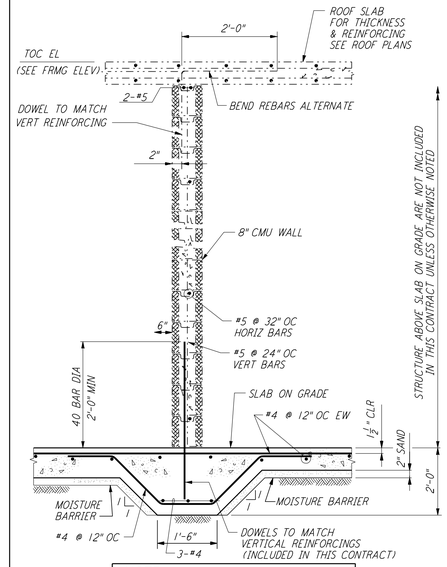

NOTE:
INSTALL MOISTURE BARRIER WITH 2" SAND COVER ONLY WHEN SLAB IS INSIDE BUILDING

MASONRY WALL DETAIL (11)

NOTES:
1. FOR GENERAL NOTES, ABBREVIATIONS AND SYMBOLS, SEE DRAWING BT-S-601.

LIGO-D960736-A-O

This document and the design it covers are the property of PARSONS. They are loaned only with the borrower's expressed written agreement that they will not be reproduced, copied, loaned, exhibited, or used in any other way, except by written consent from PARSONS to the borrower.

REFERENCES

DRAWING NO.	DESCRIPTION

REVISIONS

NO.	DATE	BY	CHKD	ENGR	PROJ	DESCRIPTION
A	4-19-96	MCS	KS	BP		CHANGE ORDER #4

DRAWN	MCS	
CHECKED		
ENGINEER		
PROJ		

PARSONS
100 WEST WALNUT STREET
PASADENA, CALIFORNIA

LIGO
CALIFORNIA INSTITUTE OF TECHNOLOGY
MASSACHUSETTS INSTITUTE OF TECHNOLOGY

LASER INTERFEROMETER
GRAVITATIONAL-WAVE OBSERVATORY
BTE SITEWORK & FABRICATION - HANFORD, WA

TITLE: STRUCTURAL STANDARD CONCRETE DETAILS SHEET 1

SCALE	CONTRACT NUMBER	PROJECT NUMBER
NONE	PP150969	8094

SHEET NUMBER: BT-S-602
REVISIONS: A

LIGOBTF.BDR

Fri Sep 11 12:56:14 1998 c:\plot\qcf\S3-30.qcf N:\DUELUES\E30B2\ST602.PMF