NOTES: (UNLESS OTHERWISE SPECIFIED)

1. FILLETS: R .015 MAX
2. BREAK ALL SHARP EDGES
3. ETCH OR SCRIBE LINE ON SIDE OF DISC, 4 PLACES, 90° APART. ETCH .02 WIDE AND .02 BELOW SURFACE.

REV	DATE	DRAWN BY	CHECKED	DCC	DCN/DESCRIPTION
A	7-28-97	J.Hazel			E970121/INITIAL RELEASE

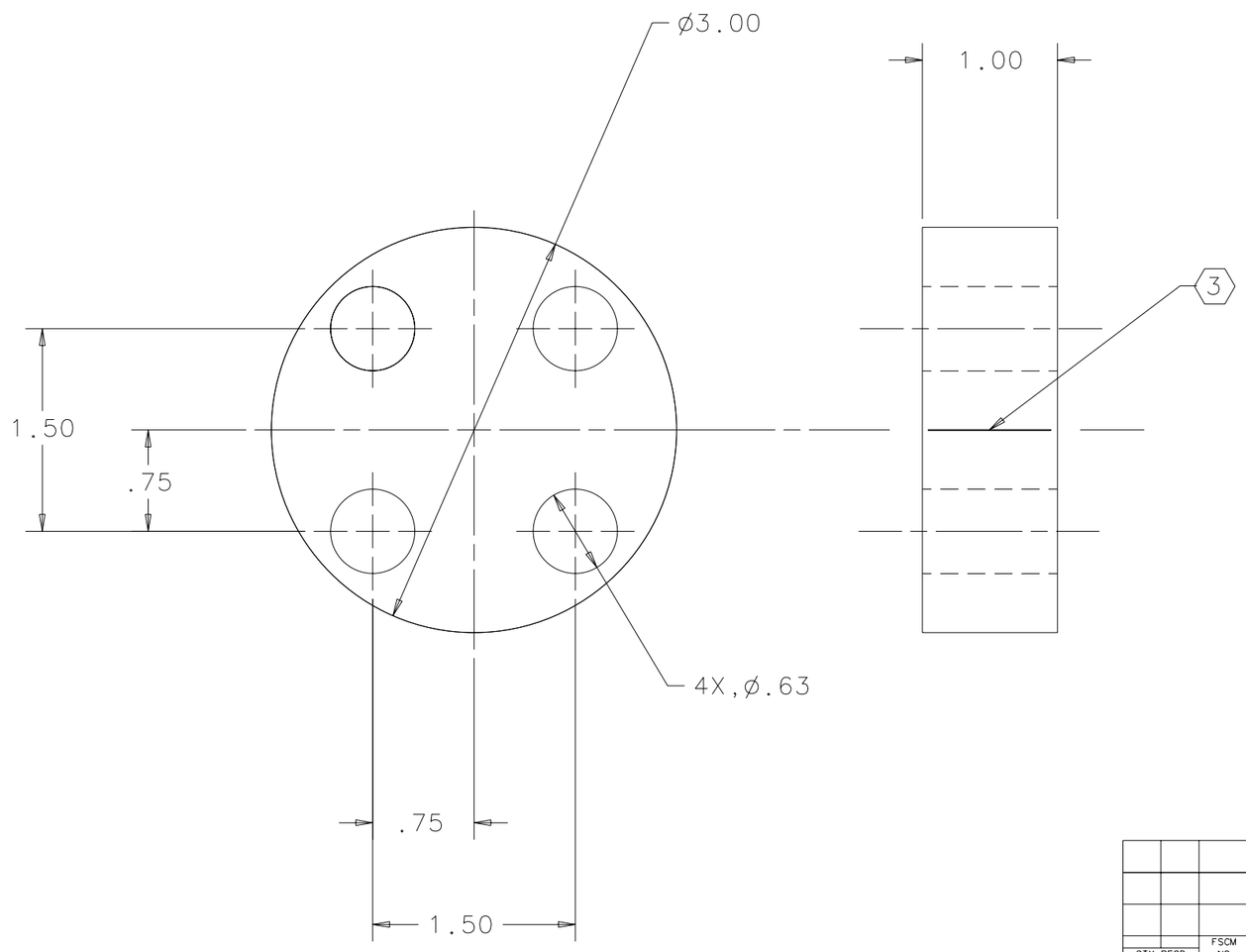

QTY REQD	FSCM NO	PART OR IDENTIFYING NO	NOMENCLATURE OR DESCRIPTION	MATERIAL SPECIFICATION	ITEM NO

PARTS LIST

UNLESS OTHERWISE SPECIFIED DIMENSIONS ARE IN INCHES
TOLERANCES ARE:
FRACTIONS DECIMALS
.XX±.01
.XXX±.005
∠ ±1/2°
DO NOT SCALE DRAWING

APPROVALS		DATE
DRAWN J. Hazel		4/96
CHECKED		

LIGO CALIFORNIA INSTITUTE OF TECHNOLOGY MASSACHUSETTS INSTITUTE OF TECHNOLOGY

TITLE SOS DUMMY MASS

DWG NO. D960159-A-D

SCALE 1/1 SHEET 1 OF 1

NEXT ASSEMBLY

MATERIAL ALUM

FINISH NONE

FILE LOCATION /home/dcc/docs/D960159.pdf