REV.	DATE	DCN #	DRAWING TREE #

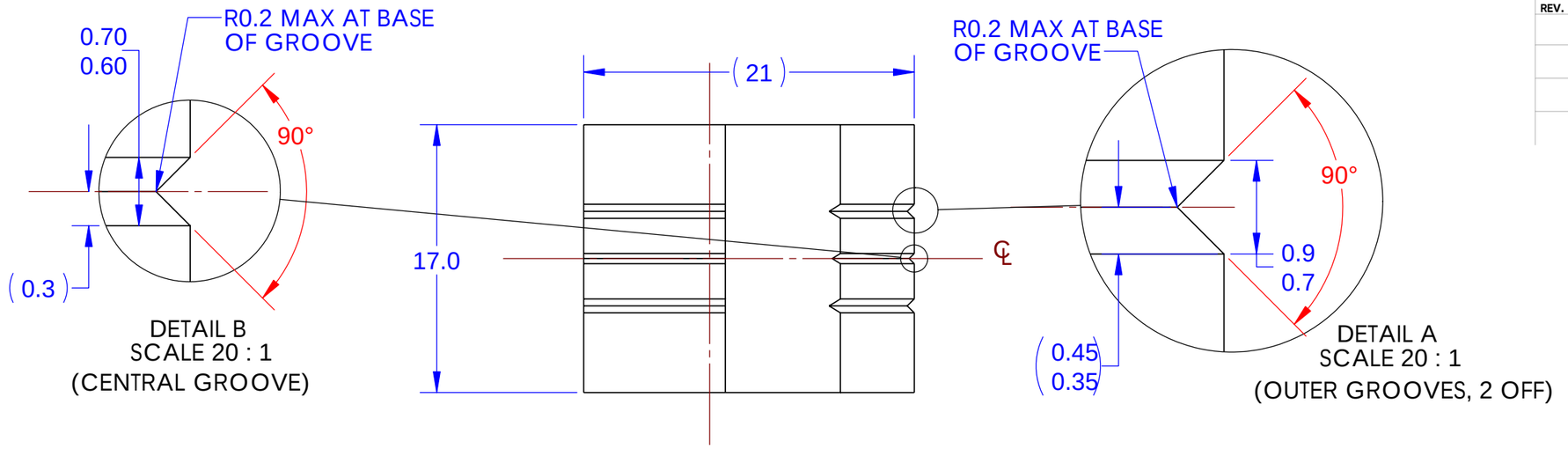

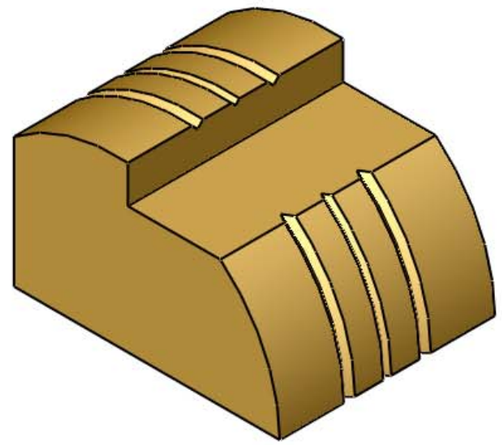

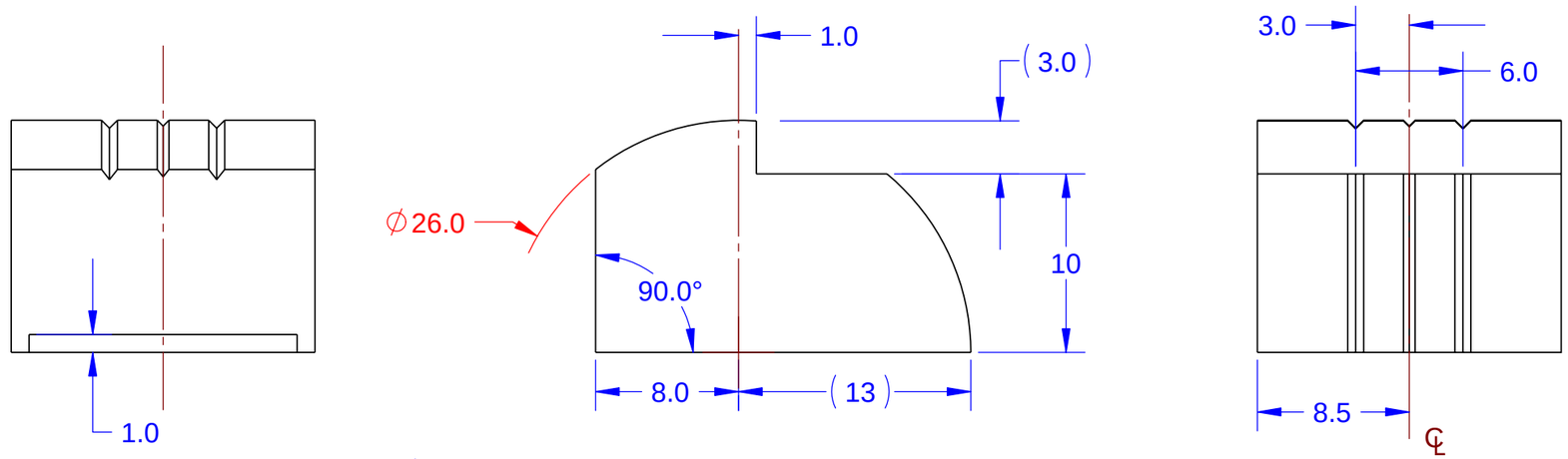

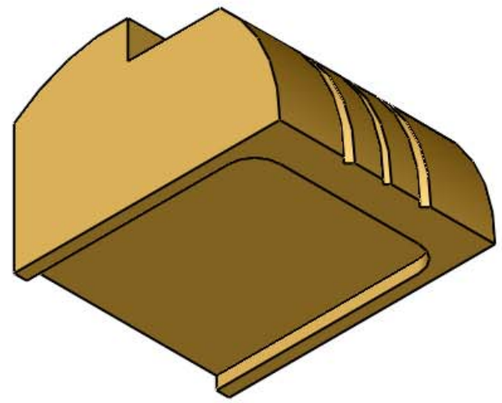

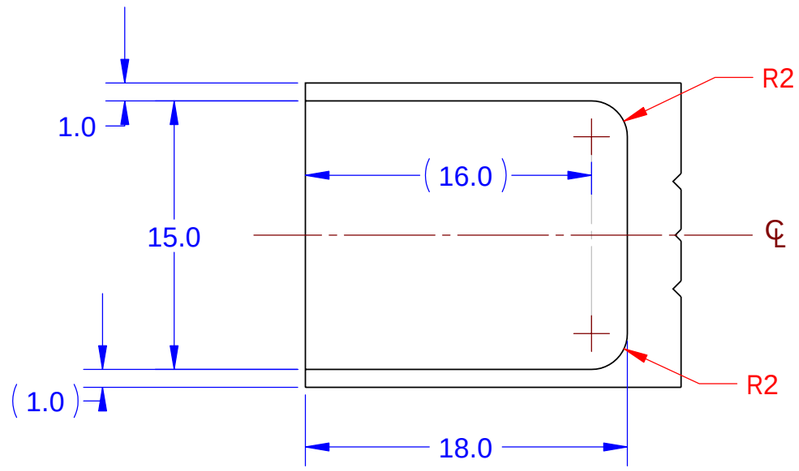

PARTS LIST

NOTES: (UNLESS OTHERWISE SPECIFIED)

1. DO NOT SCALE FROM DRAWING.
2. REMOVE ALL SHARP EDGES, R0.2 MIN.
3. ALL MACHINING FLUIDS SHALL BE WATER SOLUBLE AND FREE OF SULFUR, CHLORINE AND SILICONE
4. PART SYMMETRIC ABOUT ℄

DIMENSIONS ARE IN MILLIMETERS

TOLERANCES:
.X ± 0.1
.XX ± 0.05

ANGULAR ± 0.2 °

MATERIAL: SS 316

FINISH: 32 µ inch

	NAME	DATE
DRAWN	R.JONES	JULY 07
CHECKED	M.P-LLOYD	JULY 07
APPROVED		

CALIFORNIA INSTITUTE OF TECHNOLOGY
MASSACHUSETTS INSTITUTE OF TECHNOLOGY
IGR, GLASGOW UNIVERSITY GEO 600 GROUP

SYSTEM: ADVANCED LIGO

SUB-SYSTEM: SUS

NEXT ASSY: ETM PENULTIMATE MASS

PART NAME: METAL WIRE STAND-OFF

SIZE: B | DWG. NO.: D070279 | REV.: 01

SCALE: 4:1 | PROJECTION: | SHEET 1 OF 1