5/2 NRSB Frequency Multiplier

D050357-A-C Richard Abbott
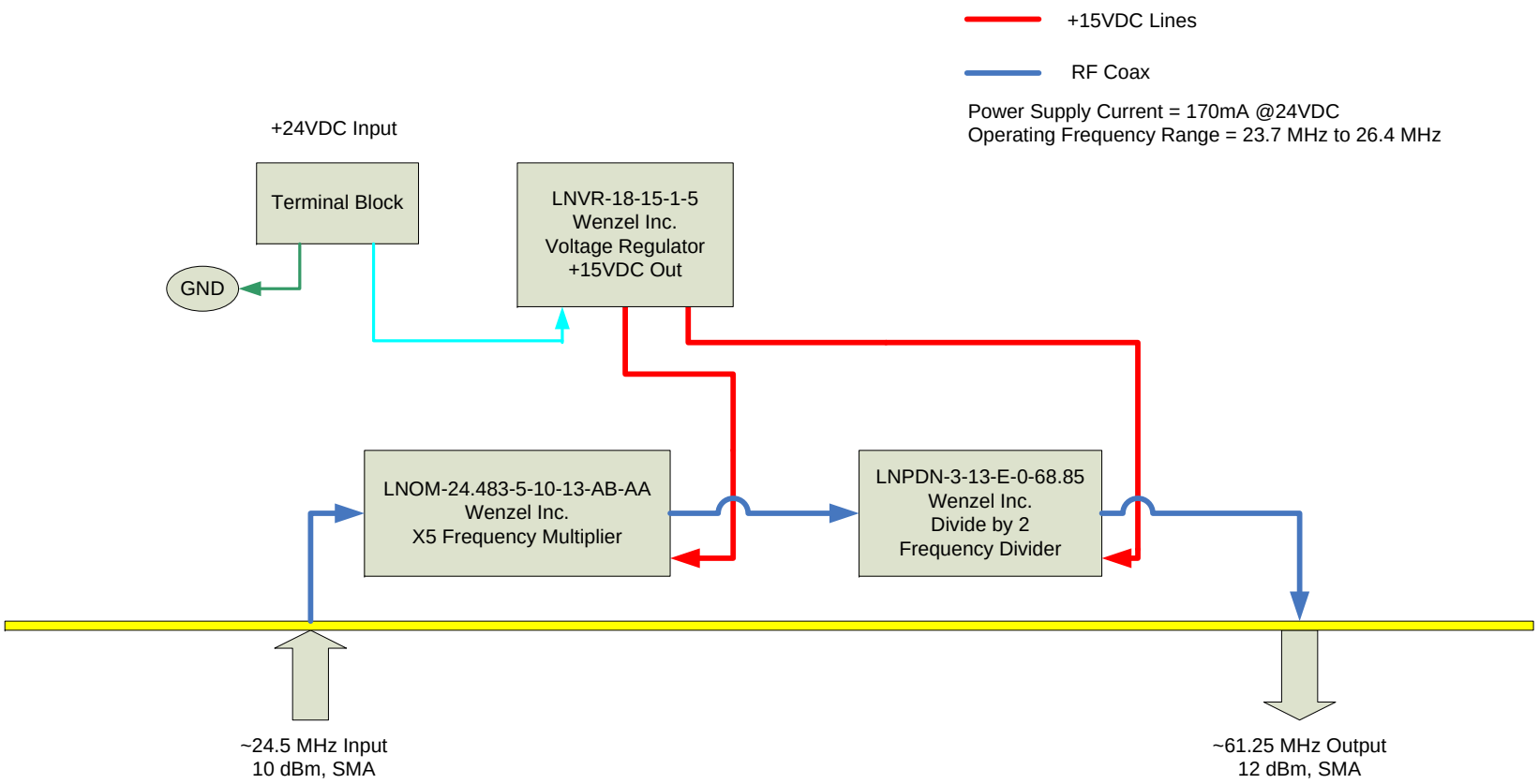
9/16/2005