REVISIONS			
REV.	DESCRIPTION	DATE	APPROVED

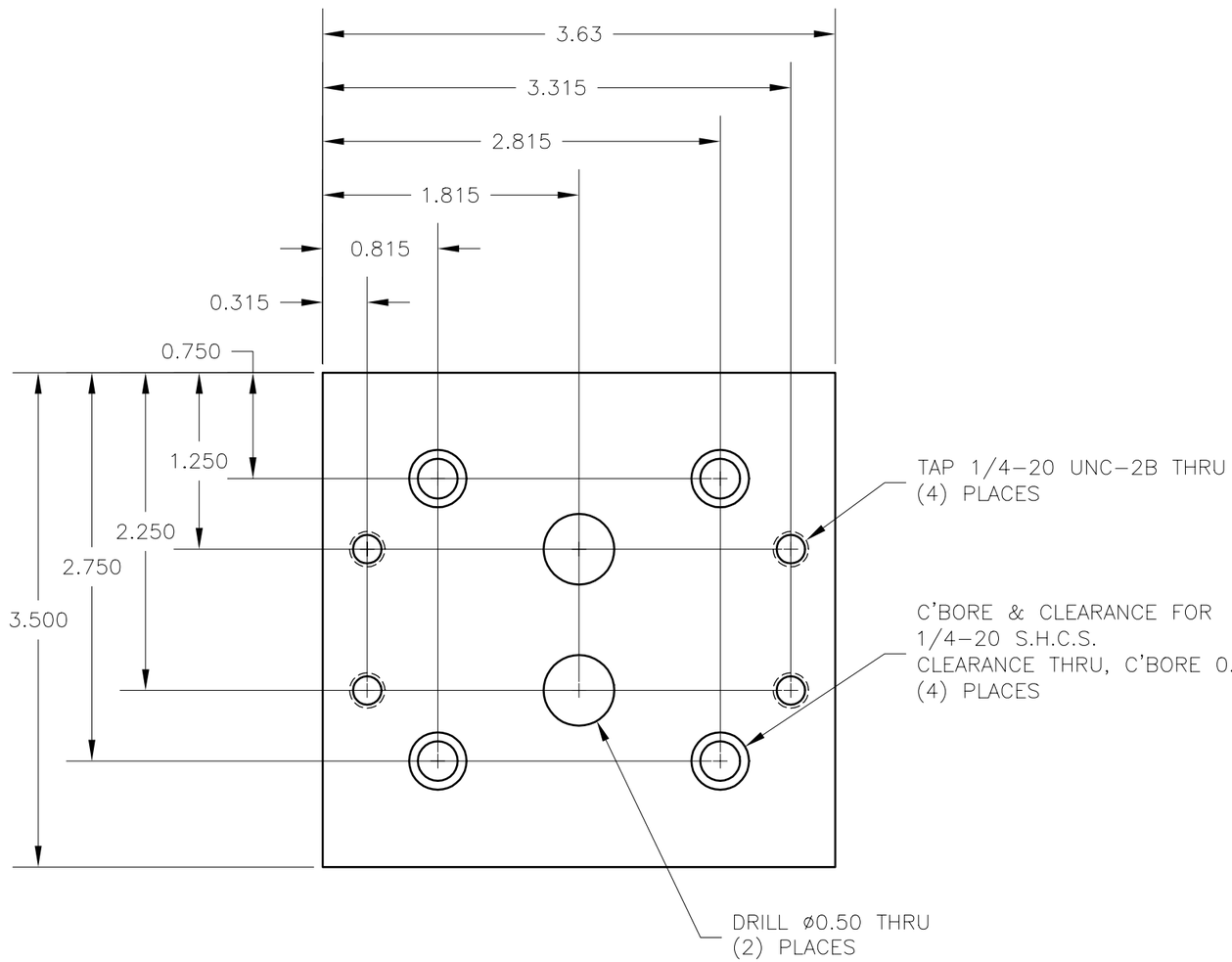

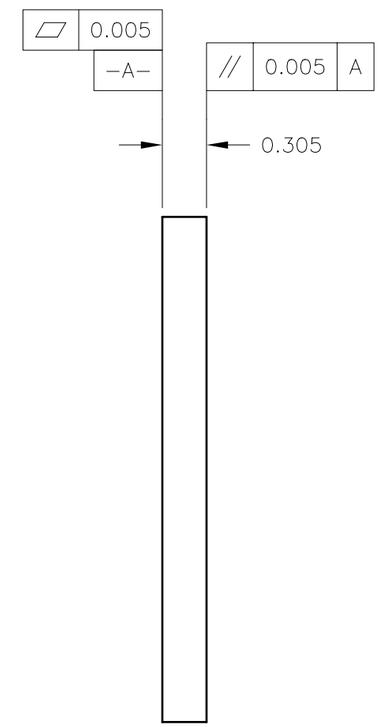

NOTES:

1. MATERIAL PREFERENCE IS DELRIN-F, OTHERWISE ANY HARD INSULATING MATERIAL, SUCH AS NYLON, WILL DO.

QTY REQD	FSCM NO.	PART OR IDENTIFYING NO.	NOMENCLATURE OR DESCRIPTION	MATERIAL SPECIFICATION

PARTS LIST

NEXT ASSY	USED ON

APPLICATION

UNLESS OTHERWISE SPECIFIED
DIMENSIONS ARE IN INCHES
TOLERANCES ARE:
FRACTIONS ± DECIMALS .XX±.01 .XXX±.005 .XXXX±.0005 ANGLES ±

MATERIAL SEE NOTE 1

FINISH

DO NOT SCALE DRAWING

CONTRACT NO.

APPROVALS	DATE
DRAWN P. KING	04/25/01
CHECKED	
ISSUED	

LIGO Project
California Institute of Technology
Massachusetts Institute of Technology

PSL *Pre-stabilized Laser*

FREQUENCY SHIFTER ADAPTER PLATES

PLATE 1

SIZE	FSCM NO.	DWG. NO.	REV.
B		LIGO-D010084-00-D	

SCALE 1:1 SHEET 1 of 2

REVISIONS			
REV.	DESCRIPTION	DATE	APPROVED

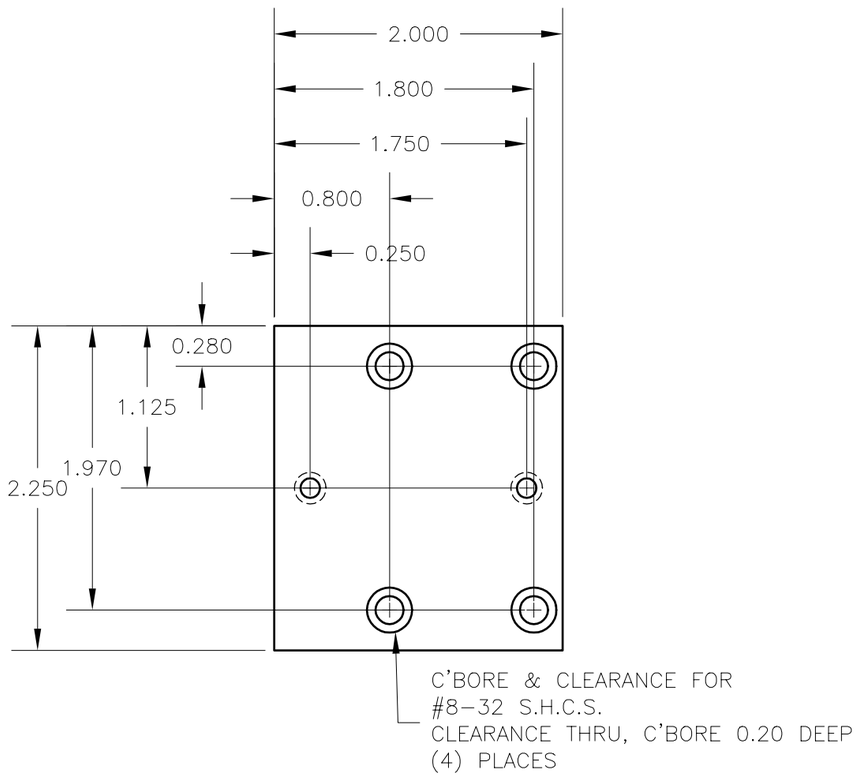

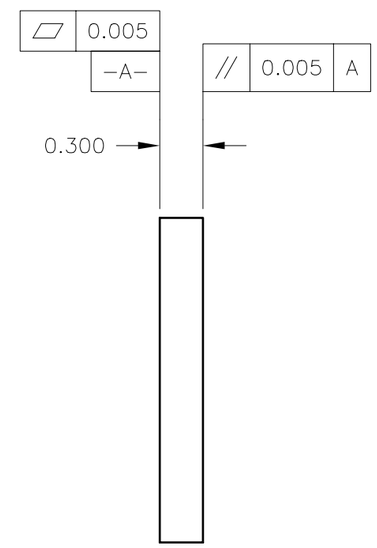

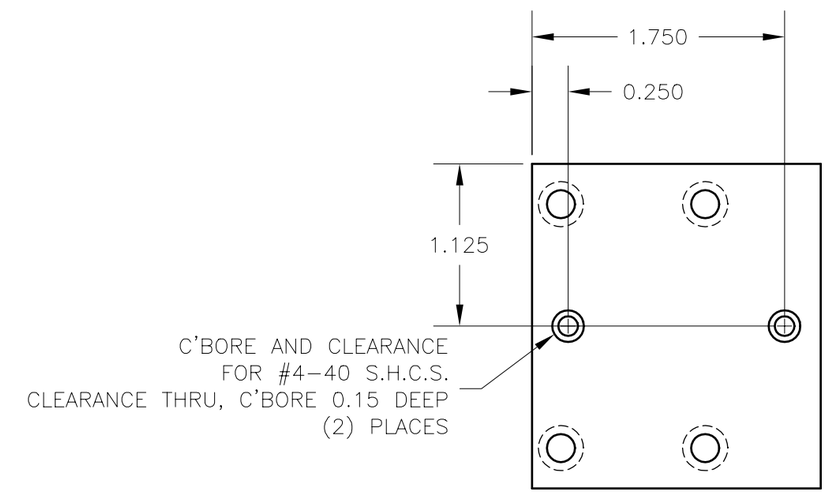

NOTES:

1. MATERIAL PREFERENCE IS DELRIN-F, OTHERWISE ANY HARD INSULATING MATERIAL, SUCH AS NYLON, WILL DO.

	QTY REQD	FSCM NO.	PART OR IDENTIFYING NO.	NOMENCLATURE OR DESCRIPTION	MATERIAL SPECIFICATION	

PARTS LIST

NEXT ASSY	USED ON

APPLICATION

UNLESS OTHERWISE SPECIFIED
DIMENSIONS ARE IN INCHES
TOLERANCES ARE:
FRACTIONS ± DECIMALS .XX±.01 .XXX±.005 .XXXX±.0005 ANGLES ±

MATERIAL: SEE NOTE 1

FINISH

DO NOT SCALE DRAWING

CONTRACT NO.

APPROVALS	DATE
DRAWN P. KING	04/25/01
CHECKED	
ISSUED	

LIGO Project
California Institute of Technology
Massachusetts Institute of Technology

PSL *Pre-stabilized Laser*

FREQUENCY SHIFTER ADAPTER PLATES

PLATE 2

SIZE	FSCM NO.	DWG. NO.	REV.
B		LIGO-D010084-00-D	

SCALE 1:1 SHEET 2 of 2