NOTES: (UNLESS OTHERWISE SPECIFIED)

Liquids containing hydrocarbons or other contaminants, other than the machining fluids specified herein, shall not be allowed to come into contact with suspension material at any time. All machining fluids shall be water soluble and free of sulfur, chlorine and silicone; such as Cincinnati Milacron's Cimtech 410 (stainless steel).

Identification Serial Number
A serial number shall be etched, or scribed on the part see note drawing note.

Serial Number Format
The Serial number shall be of the format: D99xxxx-x - 001

Example: D990021-A-001
The drawing number, The revision number, The sequential part number

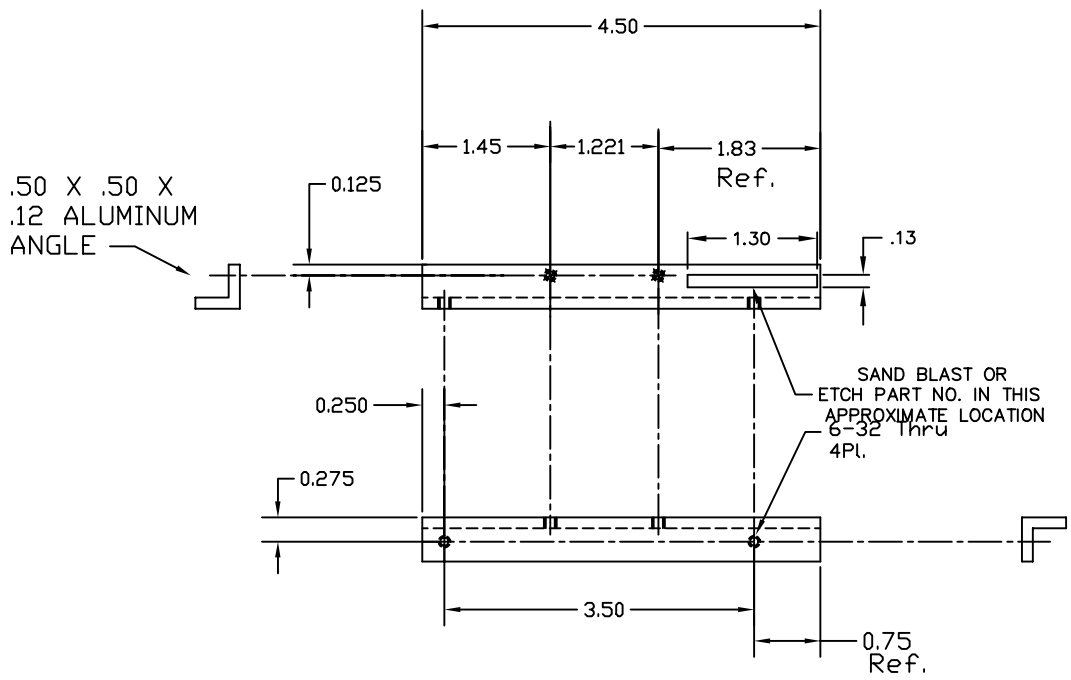

RIGHT HAND
TOP ANGLE
HAM2/3/9

REF. MAKE 1 PER ASSEMBLY

REF	QTY	PART or DRWG No.	DESCRIPTION	MATERIAL
			PARTS and MATERIAL LIST	

UNLESS OTHERWISE SPECIFIED
DIMENSIONS ARE IN INCHES

TOLERANCES:
FRACTIONAL ±1/16
ANGULAR ±.25°
~~ANGULARMACH ±~~ BEND ±
TWO PLACE DECIMAL ± .01
THREE PLACE DECIMAL ± .005
FINISHED SURFACE RMS 63
BREAK CORNERS IN: .015 OUT: .015
REMOVE ALL BURRS

MATERIAL: ALUMINUM | HEAT TREAT: – | FINISH:

REF	DESCRIPTION	DCN NUMBER	APPR'D	CHECK	DRWN	DATE
A	NEW-RELEASE	LIGO-E000206-00-D			KENM	4/19/00
00	PRE-RELEASE		–	–	KENM	4/19/00

ISSUE DESCRIPTION

DWG. NO.	DESCRIPTION
XXX	XXX

REFERENCE DRAWINGS

USED ON: XXX | NEXT ASS'Y: XXX

LIGO CALIFORNIA INSTITUTE OF TECHNOLOGY
MASSACHUSETTS INSTITUTE OF TECHNOLOGY

RIGHT HAND TOP ANGLE
HAM2/3/9 TABLE BEAM DUMP

CAD FILE: D000155-A | SIZE | DWG. NO.: D000155-A
SCALE: 1 : 1 | SHEET: 1 OF 1